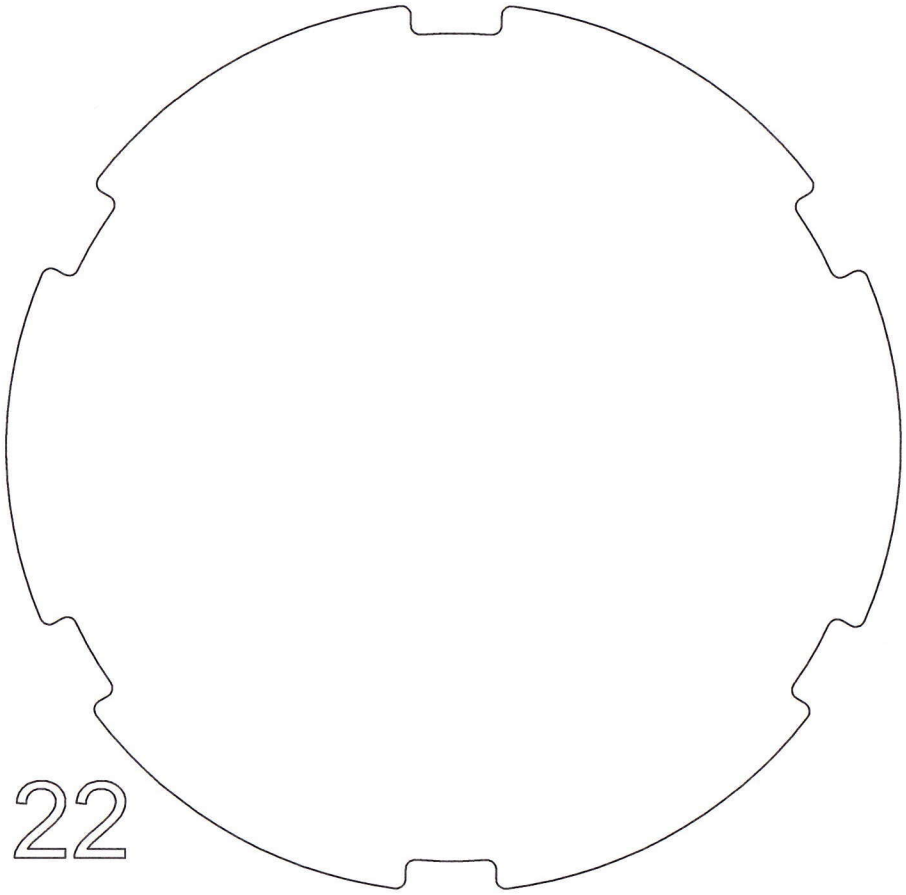
22